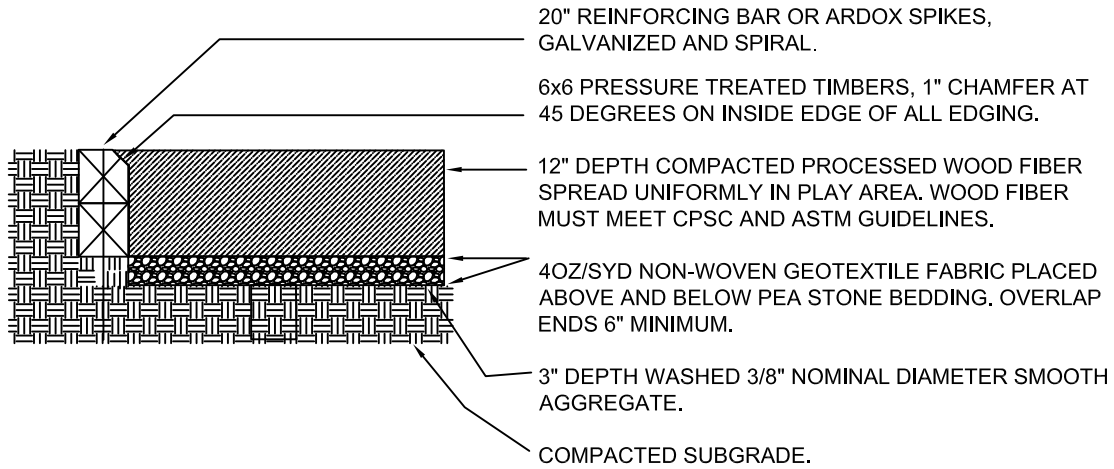

ENDS OF ALL TIMBERS SHALL BE MITERED FOR TIGHT FIT. FIRST AND SECOND COURSES SHALL OVERLAP 6" MIN AT EACH JOINT AND SHALL ALTERNATE AT ALL CORNERS. SPIKE SHALL BE INSTALLED AT ALL JOINT LOCATIONS AT 4' ON CENTER MAXIMUM.

1/1 Playground Surfacing and Edging

Not to Scale

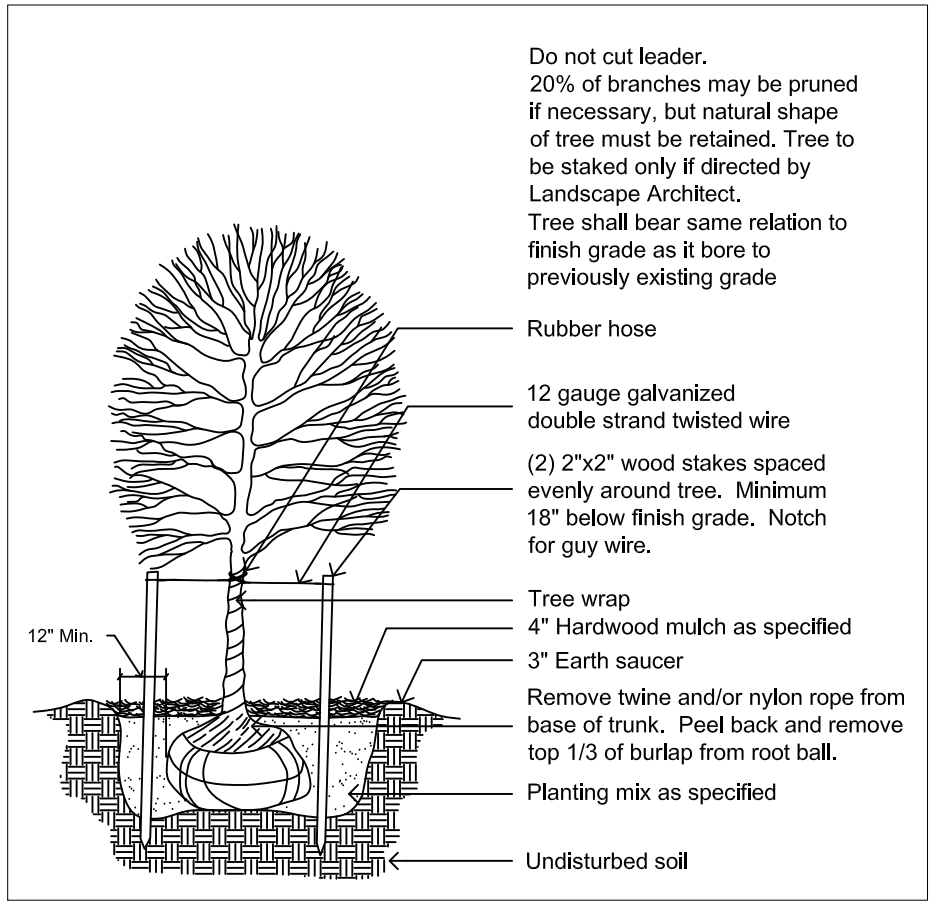

3/1 Tree Planting

Not to Scale

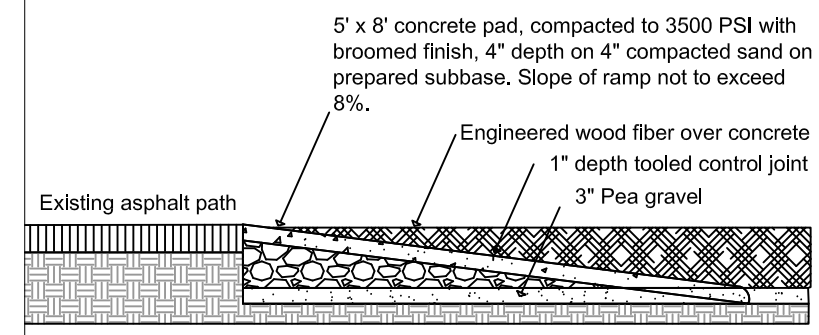

4/1 Playground Access Ramp

Not to Scale

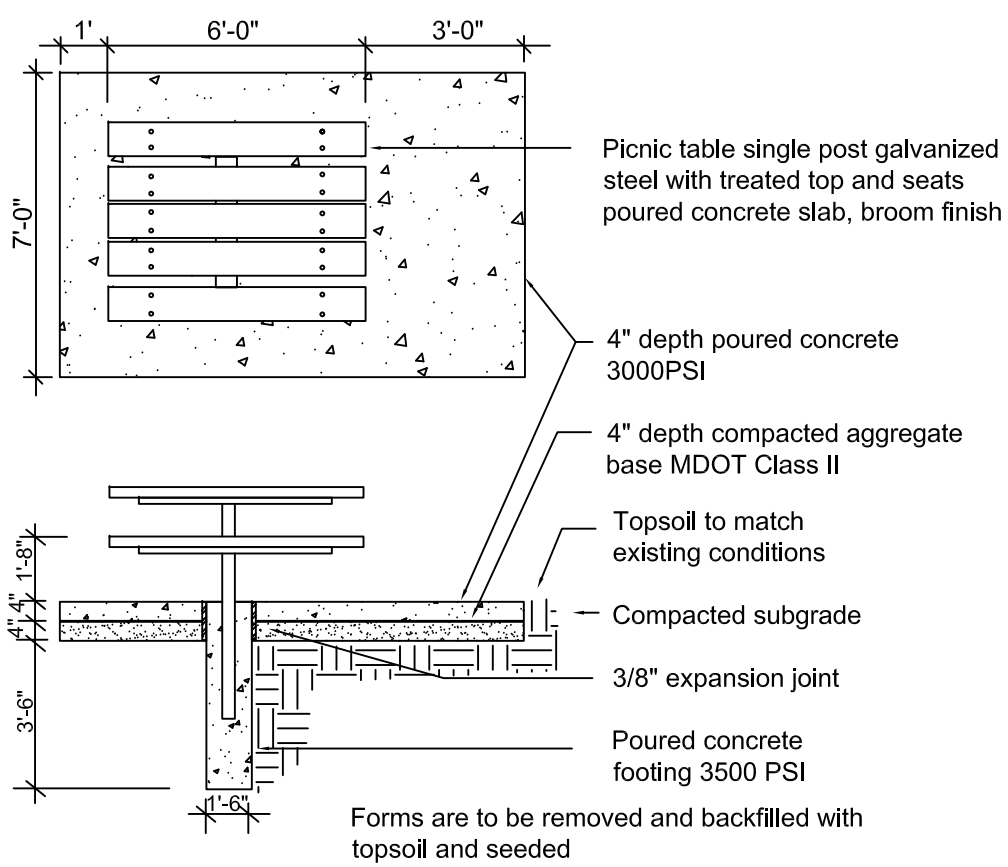

2/1 Picnic Table on Concrete Pad

Not to Scale

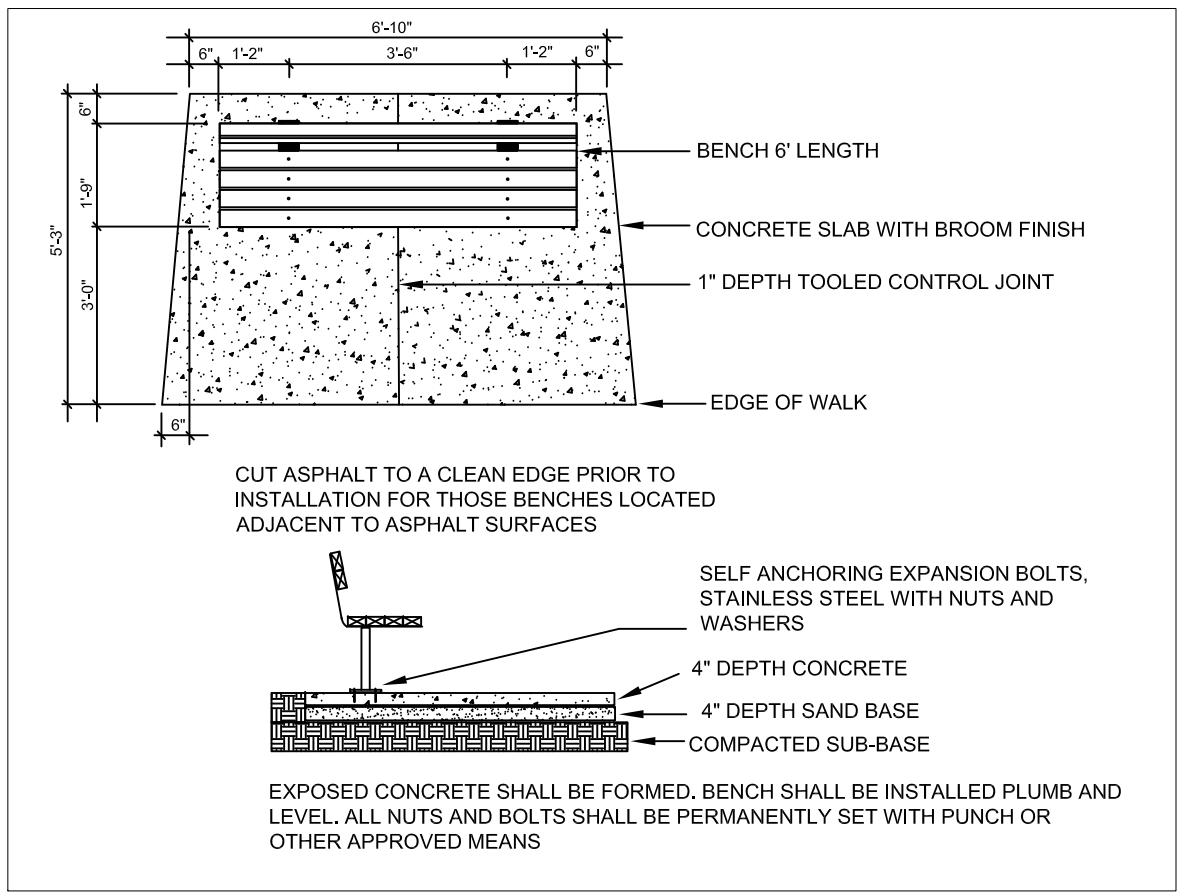

5/1 Bench on Concrete Pad

Not to Scale

Parks&Recreation
CITY OF ANN ARBOR

DESIGN A. Kurias	DATE 12/20/12	
DRAWN	APPROVE	
CHECK	APPROVE	

REVISIONS	DATE

PLACID WAY PARK IMPROVEMENTS
Details

SHEET NO. 2/2

PARKS & RECREATION
301 E. HURON • P.O. BOX 8647
ANN ARBOR, MICHIGAN 48107
PHONE: 734-794-6230 FAX: 734-994-8312

MICHIGAN